Current part is item (10) on diagram. Available at www.oshkoshequipment.com

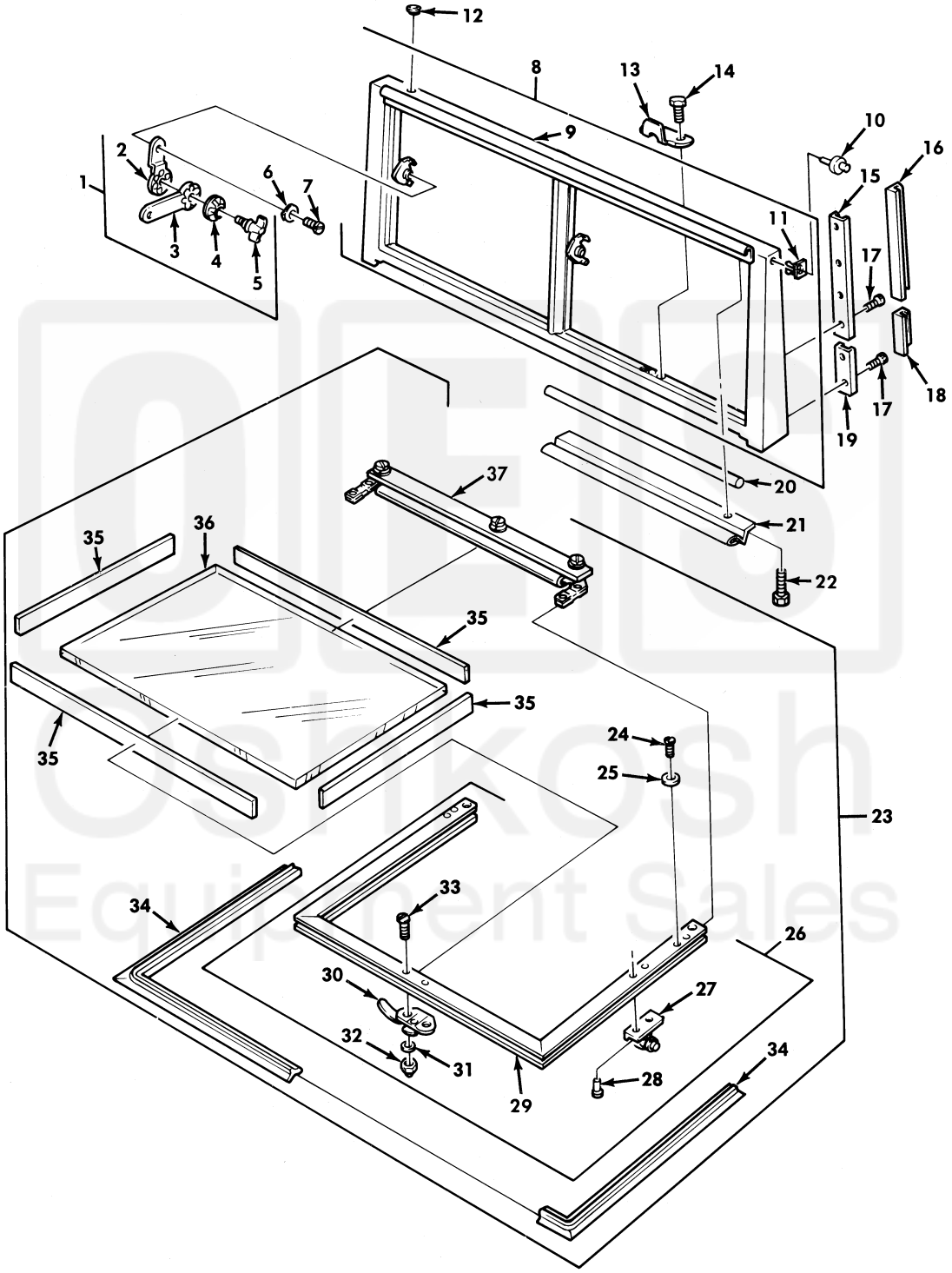

Figure 261. Windshield and Frame Assemblies.

Current part is item (10) on diagram. Available at www.oshkoshequipment.com